The Sun's Rays and Climate Demonstration

In this activity your students will:

- ☑ Understand how the angle of incoming solar radiation affects the Earth's climate.

Background Information

The amount of solar energy coming from the Sun is nearly constant. Solar insolation is the amount of light or solar radiation an area receives over a given period of time. The intensity and effect of solar insolation is determined by several factors including the solar declination angle - the angle between a plane perpendicular to incoming solar radiation and the rotational axis of the Earth, atmospheric conditions, and the Earth's tilt. Climate zones, seasonal temperature changes, and daily temperature changes are largely controlled by changes in the amount of energy received by the Sun due to changes in the angle at which solar radiation strikes the surface.

The Earth's shape is spherical. This causes the Sun's rays to strike the Earth's surface at different angles, creating variances in temperatures on Earth. The equator receives the most direct sunlightbecause sunlight arrives at a perpendicular (90 degree) angle to the Earth. Sunlight rays are concentrated on smaller surface areas, causing warmer temperatures and climates. As incoming rays move further away from the equator, solar intensity decreases. This is due to decreasing incoming sunlight angles that result in the Sun's rays being spread out over a greater surface area of the Earth. Latitudes near the poles always receive the Sun's rays at lower angles, thus creating a colder climate. In the middle latitudes, the angle of the Sun's incoming rays varies from lower in the winter to higher in the summer, causing seasonal temperature changes.

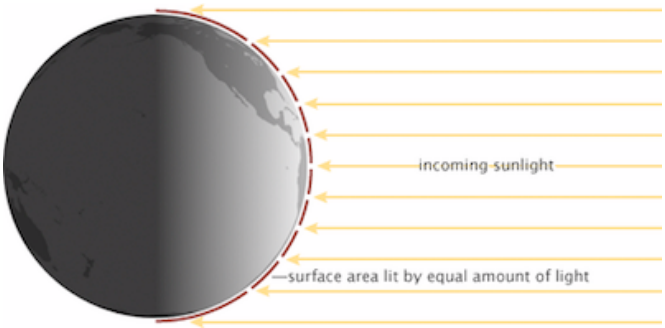

The curve of the Earth combined with the angle of solar insolation affects the distance that a beam of light must travel through the Earth's atmosphere before it reaches the Earth's surface. A beam of light passing through the atmosphere at the equator travels through less of the atmosphere than incoming light arriving at higher latitudes. As incoming light travels through more of the atmosphere, there is a greater chance for reflection and scattering of light to occur, thus reducing the insolation at the Earth's surface.

The tilt of the Earth also influences the effects of incoming solar energy on atmospheric and surface temperatures. The tilt of the Earth influences the amount of sunlight that a particular location receives. At the equator, the amount of sunlight in a day is the same each day during the year. At locations further away from the equator, seasonal changes occur and a day's length will increase during the summer season and decrease during the winter season. The longer the daylight period, the more sunlight can reach the Earth's surface at a particular location. This also contributes to seasonal changes in temperature. In the extreme, at the polar summer solstice, the sun simply moves around the horizon but doesn't set. In winter, it is below the horizon all the time, so there is constant night.

Copyright © 2011 Environmental Literacy and Inquiry Working Group at Lehigh University

Equipment List

- ☑ 1 piece of white construction paper
- ☑ 2 pieces of large-block graph paper
- ☑ 1 flashlight
- ☑ Tape
- ☑ Black marker

Demonstration Overview

This teacher-led demonstration allows students to visualize how the incoming angle of the Sun's rays affects the concentration of solar energy on areas of the Earth.

Step 1: Demonstration Preparation (set up prior to class)

1. Roll a piece of construction paper into a tube that is slightly larger than the lens of the flashlight. Tape the tube to the flashlight.

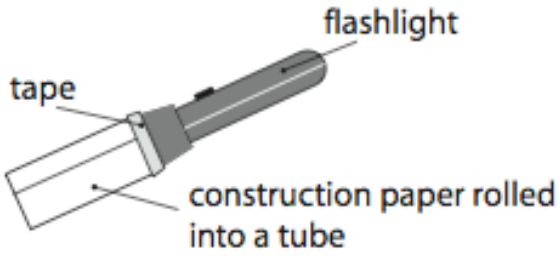

2. Draw a dark black line across the center of two sheets of large block graph paper.

3. Display a table to document your results for class discussion. Here is a sample:

Light Angle	Squares Covered
90-degree	
45-degree	

Step 2: Conducting the Demonstration

1. Position the flashlight pointing straight down at the graph paper at a 90-degree angle. Hold the flash light about 15 cm above the graph paper.
2. Ask a student to draw a line around the outer edge of the light circle that is projected on the paper.
3. Ask another student to count the number of squares that are lit. If a square is more than 1/2 lighted it counts as one square. Instruct the student to record the number of squares on the table in the 90-degree row.

Copyright © 2011 Environmental Literacy and Inquiry Working Group at Lehigh University

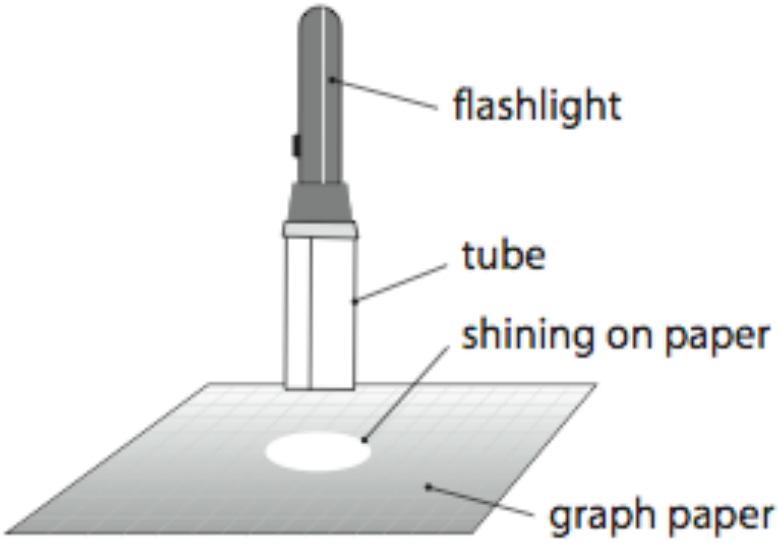

4. Position the flashlight pointing down at the graph paper at a 45-degree angle. Hold the flash light about 15 cm above the graph paper.

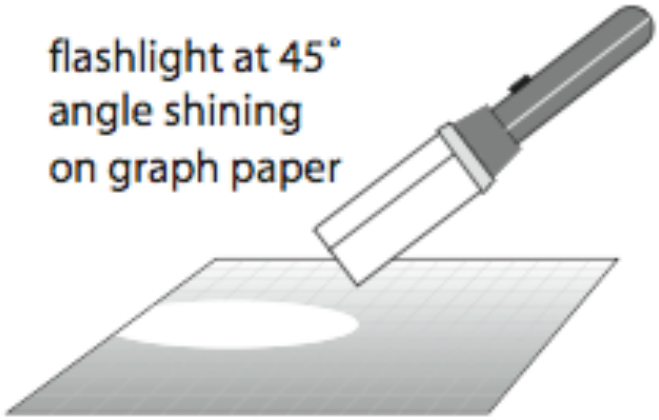

5. Ask a student to draw a line around the outer edge of the light circle that is projected on the paper.

6. Ask another student to count the number of squares that are lit. If a square is more than 1/2 lighted it counts as one square. Instruct the student to record the number of squares on the table in the 45-degree row.

Step 3: Results and Group Discussions

Ask your students to discuss the following questions as a class or in journals:

1. Which angle created the smallest area of light on the graph paper?

   The 90 degree angle created the smallest area of light on the graph paper.

Copyright © 2011 Environmental Literacy and Inquiry Working Group at Lehigh University

2. If you were able to measure the temperature of the two areas, which one do you think would be hotter? Why?

   The 90-degree angle would be hotter since this is receiving the most direct sunlight concentrated in a smaller area.

3. If the angle of the sun can affect the temperature of an area on Earth, how can it affect climate?

   In areas at the equator, the angle of incoming rays from the Sun is perpendicular (90 degrees) to the Earth's surface during all days of the year. Such areas experience warm climates throughout the year. In other locations, the angle of incoming rays from the Sun changes during the course of the year. In these areas, such as the mid-latitudes, the climate has seasonal variations.

Images provided courtesy of NASA. This activity is modified from the NASA Sunny Ray Activity - EG-2003-09-16-LARC.

Copyright © 2011 Environmental Literacy and Inquiry Working Group at Lehigh University